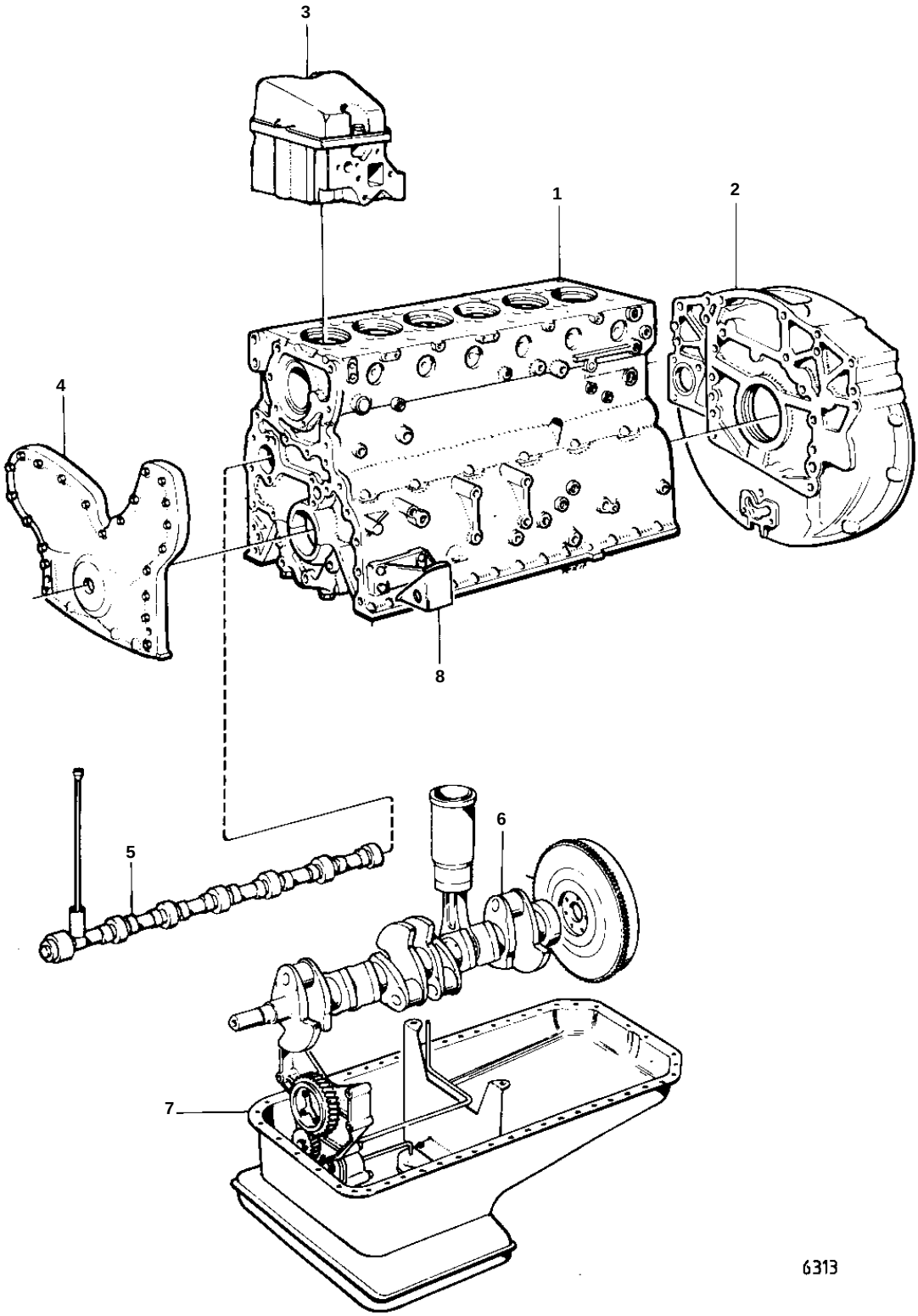
3
1
2
4
8
5
6
7
6313

REF	QTY	DESCRIPTION		SEE SEC.
1	1	CYLINDER BLOCK		02A-0325
2	1	FLYWHEEL HOUSING		02A-0450
3	6	CYLINDER HEAD		02A-0610
4	1	TIMING GEAR COVER AND GEARS		02A-0760
5	1	CAMSHAFT		02A-0835
6	1	CRANKSHAFT AND RELATED PARTS		
				02A-1050
7	1	LUBRICATING SYSTEM		02A-1310
8	1	ENGINE MOUNTS		02A-1910